Design of an Adaptive System for Stabilization of a Laser Beam for CNC Machine

Yuri V. Fedosov, Maxim Ya. Afanasev
ITMO University
St. Petersburg, Russian Federation
yf01@yandex.ru, amax@niuitmo.ru

Abstract—**The paper proposes a new approach to the design of optical stabilization systems used in modern industrial equipment. Various causes of equipment vibrations are considered. Miscellaneous designs of existing optical stabilization devices are evaluated. Some important features of their design and the possibility of using them as part of Computer Numeric Control (CNC) machines are studied. The reason and the process of creating a new design and modified mathematical model of the spatial mechanism with parallel kinematics are proposed. A new optical stabilization system using a modified Stewart platform is suggested. Features of design, motion and control are investigated. The band of allowed parameters is estimated.**

I. INTRODUCTION

Lasers have become a principal part of various amounts of technological equipment. In recent years they are widely used in numerous machine tools to cut, weld or cure polymers. During manufacturing processes, various vibrations may occur, which can influence the shape or quality of produced parts. Such vibrations can be caused by the equipment design, units' location, and various external vibration sources. Despite their minor values, these vibrations can cause manufacturing errors when objects to be produced are measured in microns. Therefore, it can often take place during the production of electronic parts or sensitive elements where such positioning errors can be critical. To prevent possible errors, laser beam stabilization should be used.

Adaptive optical stabilization systems are widely used in the numerous devices such as optical mounts, optical terminators, scanning tools, and many others. Several manufacturers such as Canon, Nikon, and Sony disclose optical stabilization and focusing schemes based on the mechanical systems using stepper and ultra sonic motors. Generally, these systems are composed of a frame with guides, and certain optical parts, such as lenses or, in some cases, the whole optical system is driven by a precise mechanism.

Alternatively, there are a large number of papers dealing with the theoretical aspects of adaptive optical systems. Particularly, the work [1] describes the robust image stabilization system for a mobile robot using Extended Kalman Filter. It is a mechanical system consisting of a motor, harmonic drive, which is connected directly to the motor, and the inclinometer to measure the angle. The paper [2] is dedicated to the problems of the application of an asymmetric voice-coil actuator for optical image stabilization in a mobile phone camera. Kim et al. [3] propose a novel hybrid optical image stabilization actuator for a digital camcorder. Optical stabilization for this hybrid type consists of both radially and tangentially moving components to compensate for hand trembling. The presented actuator is using a voice-coil motor method as well.

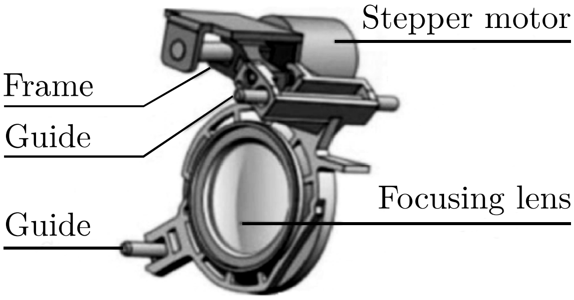

Fig. 1. Focusing mechanism

The aim of this paper is to propose a new rigid optical stabilization system using the modified Stewart platform to compensate for the possible CNC tool shake. In contrast to the Stewart platform, the designed system consists of four linear actuators. There are different types of the motors like DC brushless, stepper, and ultra sonic motors (especially the last [4–6]) that can be used as linear actuators in this system. The lens, which focuses the laser beam on the surface to be treated, is connected to the linear actuator by means of hinges. Thus, the lens in space has three degrees of freedom: one translating motions along the Z axis and two rotary motions around the X, Y axes respectively. Studies have shown that the existing mathematical model of the movement of Stewart Platform is not suitable to describe the action of the proposed stabilization system. So, in this paper, we consider a simplified mathematical model is more suitable for the implementation of CNC controller.

II. REVIEW OF EXISTING STABILIZATION SYSTEMS

We analysed a few of the optical systems. Some systems include a lens mount, where a moving lens is placed for focus adjustment. The lens is mounted on a frame moving along two cylindrical guides (Fig. 1) and is moved by a stepper motor and screw. Also, a gearbox can be added.

Unfortunately, this system is open for frame play within the degree of accuracy and its use in technological equipment may require principal design improvements.

Another system is presented in Fig. 2. A Frame with the lens is moved in three guides by three linear drives to

Fig. 2. Shake compensating system (source: https://www.4clik.com)

compensate possible lens shake [7]. The frame is positioned on the optical axis with three spring parts, mounted axially in three points. Furthermore, image stabilizing systems can utilize various carriers, in which a compensating prism or lens can be mounted [7], moved by coils and magnets [8]. Also, CCD or another terminating device orientation can be varied [8]. Their design is suitable for filming with good image quality, but may allow for positioning error caused by spring parts.

Similar systems are used in various scanning and reading systems. Such a system is exemplified by CD-drive carriage (Fig. 3).

The system includes spring elements and coils and allows changing focus and adjustment of the lens' position according to track position on the laser disk. This system is intended to perform a special task, has specific working zones and is not rigid enough to be used as a part of the precise technological equipment.

Another design of the focusing system includes the lens frame (or whole optical system) mounted in moving barrel, which can move back and forth driven by a stepper motor, or ultra sonic motor [7].

It is worth mentioning that the reviewed systems perform only one task—focusing the image or stabilizing it. They are driven by mechanisms that have uncompensated clearance spaces, specifically, between barrel thread and frame thread, or spaces between the gear teeth. The paper [8] demonstrates that these clearance spaces influence the image quality because such design allows loose mounting of the optical system parts.

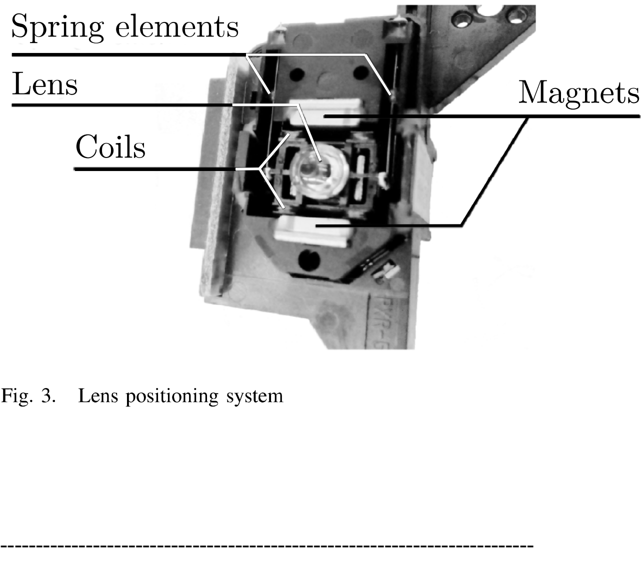

Fig. 3. Lens positioning system

Consider, for instance, the system described in the patent [9] of laser beam control for the CNC machine tool. During machine work, heating or cooling parts of the laser beam deflection system may occur, which leads changes in their initial positions, and altering the laser beam trajectory. To compensate for the changes, a special optical scheme is presented, which utilizes a complicated tracking element and moves the mirror.

If the beam deviates, the moving mirror changes its orientation to compensate for the positioning error. Note that in the reviewed mechanism, the deflecting mirror position is changeable and the utilized optical system includes complicated tracking element, which can be redundant in a few cases.

Consequently, when a laser beam is passing through the tracking element, part of its power will be lost. To simplify the optical and control schemes, a change of the orientation of the laser beam focusing system is proposed. This makes it possible to wean off of the movable mirror and substitute the control element with a video camera, which will track the laser beam position on the object.

III. PROPOSED MECHANISM

There is a mathematical model, described in article [10], that deals with a laser beam focusing system used in a five-axis CNC machine tool and is intended to control laser welding or laser cutting. The main advantage of this approach is the control of laser beam focusing. This is simpler than the other systems reviewed because instead of using a complicated optical and mechanical scheme, it only takes moving the focusing element. However, this model doesnt include all possible vibrations, which can deviate the processing trajectory and can occur during laser beam movement.

The modelled system compensates only for vibrations that change the distance between the surface and focusing element, but the laser beam can deviate not only in one direction, but also from side to side. To improve positioning accuracy, the possibility of a position change by the two additional axes must be presented respectively.

We then consider the optical system mounted on a modified Stewart platform [11–14], which is moved by four drives (Fig. 4). The presence of four drives providing the linear motion decreases the number of freedom degrees to three: two tilts around O_X and O_Y and linear movement along the O_Z axis. This design sustains the centre of the moving platform on the optical axis of the system.

The use of such architecture and the presence of three freedom degrees allows for compensating its occasional deviations from the fixed optical axis by tilting the lens around the two axes. Focal setting changing by moving the platform along the optical axis is also possible. Linear drives, stepper motors with ball-screws or ultra sonic motors can be used to vary the lengths of the sliding shafts [15].

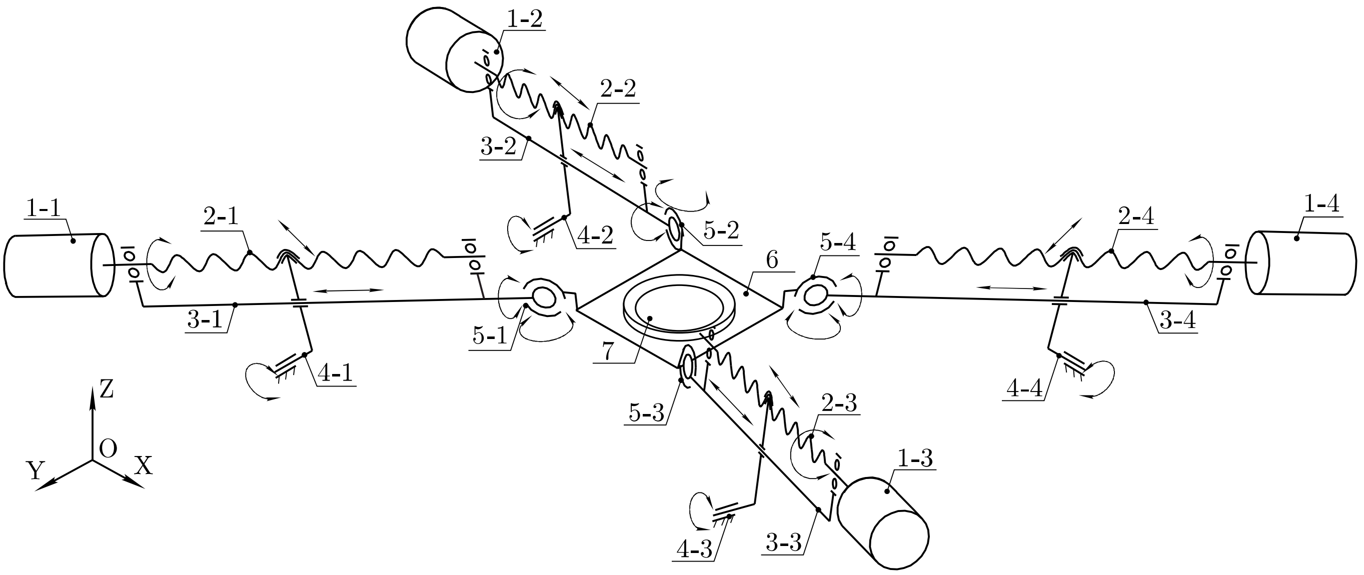

Fig. 4. Modified Stewart platform kinematic scheme. 1 – motors, 2 – ball-screws, 3 – sliding shafts, 4 – hinges, 5 – link ball joints, 6 – moving platform, 7 – lens

The compensating element lens or prism can be mounted on a moving platform. To make corrections in real-time mode, a closed loop must be organized. Therefore, a gyroscope and three or more accelerometers must be installed to track vibrations. Data from the sensors will be processed using a Kalman filter. According to processed data, the proportional and reset controller parameters will be adjusted.

Because of its rigidity, compensated positioning error, and definite positioning, this system can be integrated into a CNC machine to stabilize the laser beam. A possible design is shown in Fig. 5.

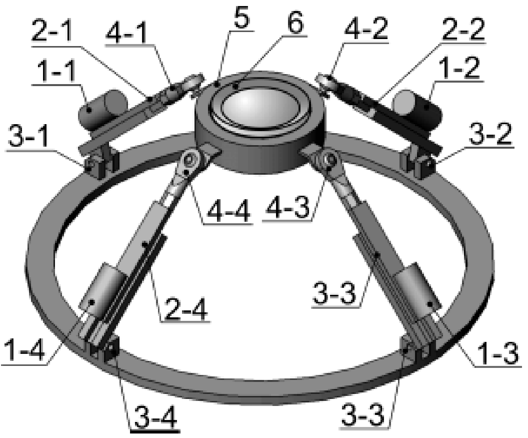

Fig. 5. Modified Stewart platform. 1 – motors, 2 –sliding shafts, 3 – hinges, 4 – link ball joints, 5 – moving platform, 6 – lens

This system was modelled. Specific parameters were calculated for the given angular ranges and positioning coordinates. Also, specifications for sliding shafts lengths were stated.

IV. MATHEMATICAL MODEL

To solve the problem of automatic vibration compensation and the adjustment of the position of the laser beam during its movement, optimal trajectories of the platform orientation changes were chosen. Fig. 6 shows the relation between the height of the moving platform and the tilt angle for one pair of slide shafts, which can be expressed as (1):

$$f(h, \alpha) = \sqrt{a^2 + b^2 + h^2 - 2a(b\cos\alpha + h\sin\alpha)}, \qquad (1)$$

where h is the distance between the centre of the moving platform, α is the angle between the optical axis and moving platform, a, b are the lengths of the sliding shafts [16]. It should also be noted that the allowable range of movement of the sliding shafts is non-convex. Hence, the moving of the platform from one position to another is carried out along a curved path. However, for small angles the curvature is negligible, and it can be assumed that the movement is in a straight line. Since the picture represents data for a large-sized physical model, the size of the convex part is quite noticeable (Fig. 6). For an actual device, it will not be so large. A platform mock-up was constructed to match the optimal moving joints parameters and couplings with positioning elements. The mock-up is shown in Fig. 7. All the parameters of the mock-up model are listed by Table I.

TABLE I. MOCK-UP'S PARAMETERS

Parameter	Value
H_{max}	$100.5\,mm$
H_{min}	$80.5\,mm$
Max steps	6500
Correction	$22\,mm$
Steps per mm	365.17
Resolution	$2.7\,\mu m$

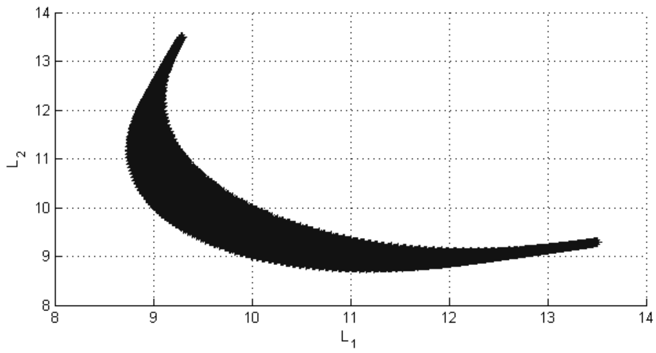

Fig. 6. Shafts lengths acceptable region

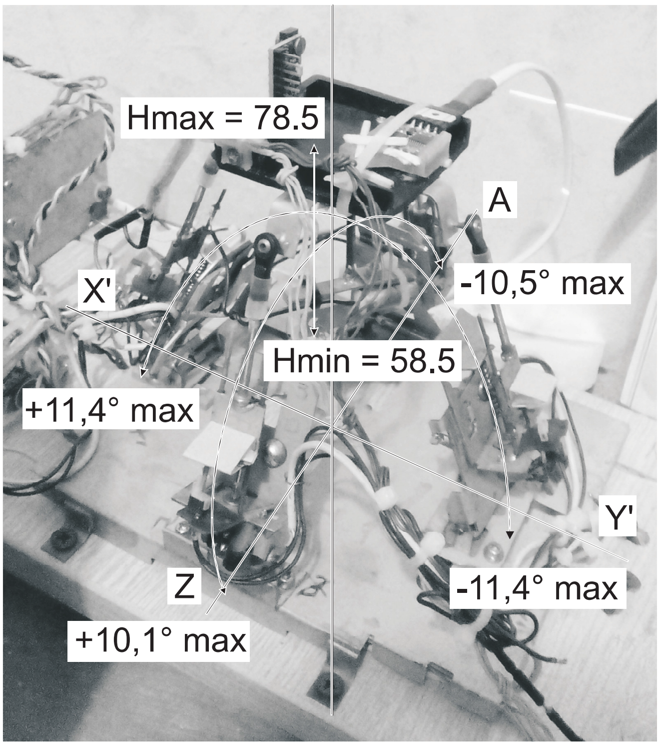

Fig. 7. The mock-up of the platform

Geometrically, two opposite drives can be presented as shown in Fig. 8. Correction of the drivers' heights will be as shown in Fig. 9. In the frontal projection, platform S rotates by the angle γ (Fig. 10). The equation to define the correction of the projection of the length of A (or B) in the direction of S is (2):

$$\mathcal{C} = \frac{S}{2} - \frac{S}{2} \cdot \cos\gamma, \tag{2}$$

where $\mathcal{C}$ is the correction and S is the length of the moving platform. The height of the moving platform will be defined as eqs. (3) to (5):

$$H = \frac{(H - \Delta) + (H + \Delta)}{2} \tag{3}$$

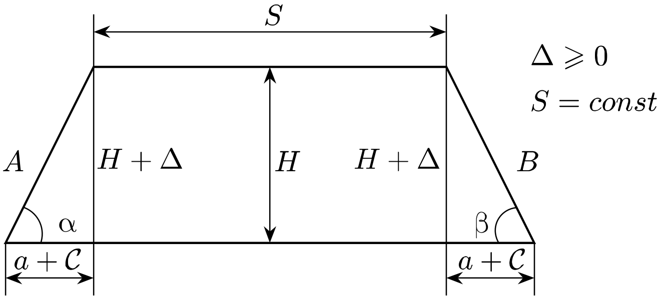

Fig. 8. A and B – lengths of the two opposite drives, S – length of the moving platform, H – height of the moving platform

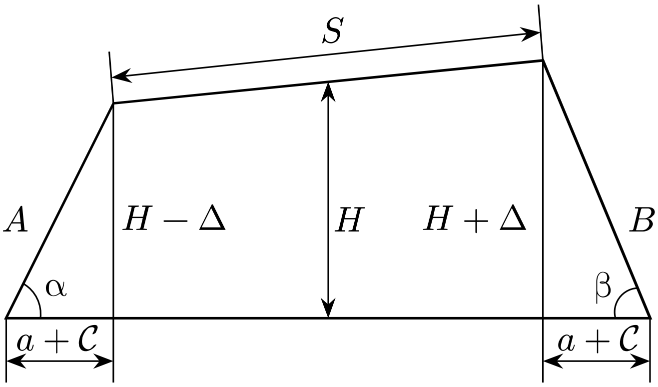

Fig. 9. Correction definition

$$\begin{gathered}
A^2 = (a + \mathcal{C})^2 + (H - \Delta)^2 \\
B^2 = (a + \mathcal{C})^2 + (H + \Delta)^2 \\
H - \Delta = \sqrt{A^2 - (a + \mathcal{C})^2} \\
H + \Delta = \sqrt{B^2 - (a + \mathcal{C})^2}
\end{gathered} \tag{4}$$

$$\begin{aligned}
H = {} & \frac{\sqrt{A^2 - (a + {}^{S}\!/_{2} - {}^{S}\!/_{2} \cos\gamma)^2}}{2} + \\
& + \frac{\sqrt{B^2 - (a + {}^{S}\!/_{2} - {}^{S}\!/_{2} \cos\gamma)^2}}{2}
\end{aligned} \tag{5}$$

To determine the angle of the platform γ use the law of cosines 6. The solution of the equation is given by 7. The geometric representation of the solution shown in Fig. 11.

$$\begin{aligned}
\Delta^2 = {} & \left(\frac{S}{2}\right)^2 + \left(\frac{S' - 2(a + \mathcal{C})}{2}\right)^2 - \\
& - 2\cos\gamma \left(\frac{S}{2}\right) \left(\frac{S' - 2(a + \mathcal{C})}{2}\right)
\end{aligned} \tag{6}$$

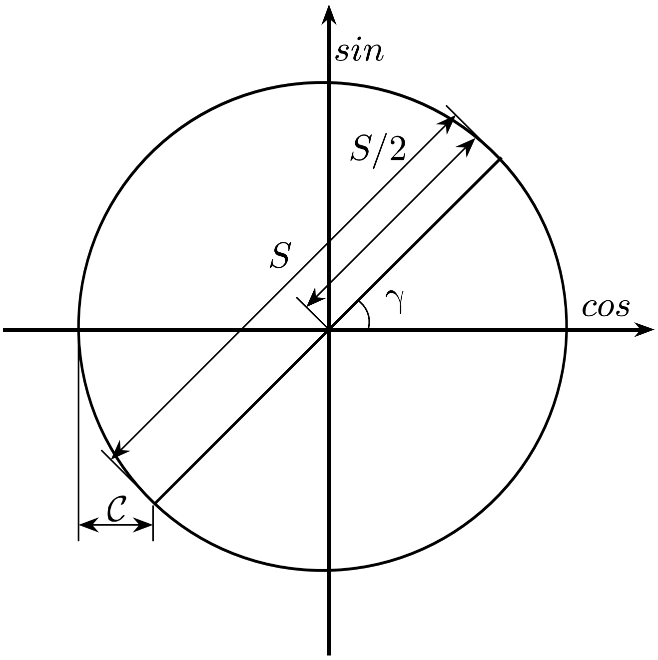

Fig. 10. Platform rotation

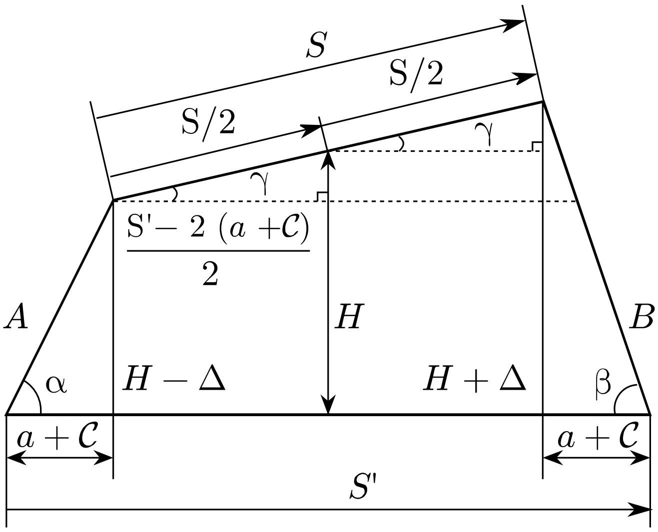

Fig. 11. Angle definition

$$\gamma = \pm \arccos\left[\left(\frac{4a^2 + 8a\mathcal{C} - 4aS' + 4\mathcal{C}^2}{4S(a+\mathcal{C}+S')}\right) - - \left(\frac{4\mathcal{C}S' + 4\Delta^2 - S^2 - S'^2}{4S(a+\mathcal{C}+S')}\right)\right] + 2\pi n, n \in \mathbb{Z} \tag{7}$$

Direction cosines (Fig. 12) will be determined as eq. (8):

$$e_x = \frac{a_x}{|\bar{a}|}; \qquad e_y = \frac{a_y}{|\bar{a}|} \tag{8}$$

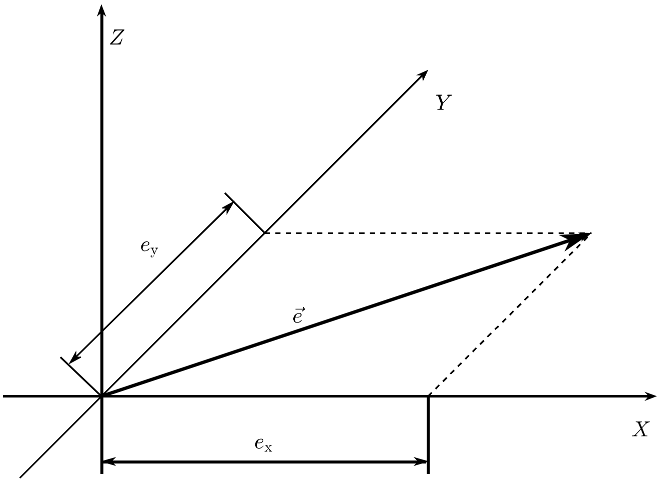

Fig. 12. Direction cosines

Euler's unitary vector is eq. (9):

$$\vec{\Theta} = \begin{bmatrix} \theta_x \\ \\ \theta_y \end{bmatrix} = \Theta_{\vec{e}} = \begin{bmatrix} \theta_{e_x} \\ \\ \theta_{e_y} \end{bmatrix}, \tag{9}$$

where e_x, e_y is direction cosines of the unitary vector $\vec{e}$ in moving frame (O_Z axis excluded, due to no rotation around it). Rotation vector is eq. (10).

$$\mathbf{\Theta} = \begin{bmatrix} \theta_x \\ \\ \theta_y \end{bmatrix} = 2\vec{e}\tan\frac{\theta}{2} = \begin{bmatrix} 2e_x \tan {}^{\theta}/_{2} \\ \\ 2e_y \tan {}^{\theta}/_{2} \end{bmatrix} \tag{10}$$

Rodriguez–Hamilton parameters are 11.

$$\begin{aligned} \lambda_0 &= \cos\frac{\theta}{2} \\ \lambda_1 &= e_x \sin\frac{\theta}{2} \\ \lambda_2 &= e_y \sin\frac{\theta}{2} \end{aligned} \tag{11}$$

$$\lambda_0^2 + \lambda_1^2 + \lambda_2^2 = 1$$

consequently, quaternion [17–20] with zero component is eq. (12):

$$\mathbf{\Lambda} = \Lambda_0 + \vec{\Lambda} = \lambda_0 + \lambda_1\vec{i} + \lambda_2\vec{j} = \cos\frac{\theta}{2} + \vec{e}\sin\frac{\theta}{2}, \tag{12}$$

and quaternion [21–25] scalar part is eq. (13)

$$\Lambda_0 = \lambda_0 = \cos\frac{\theta}{2}, \tag{13}$$

quaternion vectorial part is eq. (14)

$$\vec{\Lambda} = \lambda_1\vec{i} + \lambda_2\vec{j} = \vec{e}\sin\frac{\theta}{2}, \tag{14}$$

where $\vec{i}, \vec{j}$ are unit vectors of the moving frame. Rodriguez parameters is eq. (15)

$$\begin{cases} 2\dot{\lambda}_0 = -\lambda_1\omega_x - \lambda_2\omega_y \\ 2\dot{\lambda}_1 = \lambda_0\omega_x \\ 2\dot{\lambda}_2 = \lambda_0\omega_y \end{cases} \tag{15}$$

For Rodriguez–Hamilton [23] parameters and Euler's unitary vector components orthogonal transformation matrix is as follows (16):

$$C_{i,j}^{x,y} = \begin{bmatrix} \lambda_0^2 + \lambda_1^2 - \lambda_2^2 & 2\lambda_1\lambda_2 \\ 2\lambda_1\lambda_2 & \lambda_0^2 + \lambda_2^2 - \lambda_1^2 \end{bmatrix} \tag{16}$$

V. CONCLUSION

Several designs of optical stabilization and focusing systems were reviewed. A mathematical model of a beam stabilization system for CNC machine was studied. Numerous existing designs of optical stabilization devices were considered to clarify the scope of the modelling problem. Their advantages and possibility of using them as part of a CNC machines were studied. We propose a modified Stewart platform design. The optical beam stabilizing system based on such a platform was considered. The platform is moved by four symmetrically placed linear motion drives. This design reduces the number of degrees of freedom to three: two tilts around O_X and O_Y and linear movement along O_Z axis. Such a design sustains the centre of the moving platform on the optical axis of the system. The optical compensating element—lens or the prism will be mounted on the moving platform. Because of the construction symmetry, just one pair of sliding shafts was provided for the basis for the mathematical model.

A large-scale stabilization system mock-up was built, and the acceptable region for sliding shafts was determined. To determine the platform movements and calculate the heave and tilt angels, the mathematical model based on quaternion and trigonometric equations is proposed. Due to only three freedom degrees, a quaternion with zero components to describe the platform rotation was used. Furthermore, a mock-up test will be completed, after which the compensating system will be built. The development of software for platform control will be conducted based on the modelling results. It is intended that the results will be used in the development of the intelligent laser head, in particular, in the laser beam stabilization system. Further, the laser head will be used as a part of a device for selective polymer curing.

REFERENCES

[1] Y. W. Choi, T. H. Kang, and S. G. Lee, *Development of Image Stabilization System Using Extended Kalman Filter for a Mobile Robot.* Berlin, Heidelberg: Springer Berlin Heidelberg, 2010, pp. 675–682.

[2] M.-G. Song, N.-C. Park, K.-S. Park, and Y.-P. Park, "Improvement of an asymmetric actuator for optical image stabilization," *Microsystem Technologies*, vol. 17, no. 5, pp. 1231–1241, 2011.

[3] C. Kim, M.-G. Song, N.-C. Park, K.-S. Park, Y.-P. Park, and D.-Y. Song, "Design of a hybrid optical image stabilization actuator to compensate for hand trembling," *Microsystem Technologies*, vol. 17, no. 5, pp. 971–981, 2011.

[4] C. Corbier and J.-C. Carmona, "Robust black-box modeling of piezoelectric actuators for vibration drilling control," *Journal of Intelligent & Robotic Systems*, vol. 76, no. 3, pp. 385–399, 2014.

[5] S. N. Shatokhin and A. O. Golovin, "Ultrasonic motorized spindle with hydrostatic bearings," *Russian Engineering Research*, vol. 36, no. 8, pp. 692–695, 2016.

[6] A. Mohammadi, A. F. Tehrani, and A. Abdullah, "Investigation on the effects of ultrasonic vibration on material removal rate and surface roughness in wire electrical discharge turning," *The International Journal of Advanced Manufacturing Technology*, vol. 70, no. 5, pp. 1235–1246, 2014.

[7] FUJIFILM Corporation. (2016) Fujifilm x-mount lenses and accessoires. http://www.fujifilm.com/products/digital_cameras/pdf/lenses_accessories_catalogue_01.pdf.

[8] D. Sachs, S. Nasiri, and D. Goehl, *Image Stabilization Technology Overview.* 3150A Coronado Drive, Santa Clara, CA 9505: InvenSense, Inc.

[9] J. Mayer, "Laser beam position control apparatus for a cnc laser equipped machine tool," U.S. Patent 6 528 762, 04.03.2003.

[10] Q. S. Xie, P. Tu, B. Sheng, and D. Z. Zhou, "An integral sliding model tracking strategy for 3d laser beam position control," *The International Journal of Advanced Manufacturing Technology*, vol. 18, no. 9, pp. 633–640, 2001.

[11] B. Dasgupta and T. Mruthyunjaya, "The Stewart platform manipulator: a review," *Mechanism and Machine Theory*, vol. 35, no. 1, pp. 15–40, 2000.

[12] H. Gattringer, R. Naderer, and H. Bremer, *Modeling and Control of a Pneumatically Driven Stewart Platform.* Dordrecht: Springer Netherlands, 2009, pp. 93–102.

[13] L. Kübler, C. Henninger, and P. Eberhard, "Multi-criteria optimization of a hexapod machine," *Multibody System Dynamics*, vol. 14, no. 3, pp. 225–250, 2005.

[14] A. Müller and P. Maißer, "Kinematic and dynamic properties of parallel manipulators," *Multibody System Dynamics*, vol. 5, no. 3, pp. 223–249, 2001.

[15] D. Stewart, "A platform with six degrees of freedom," in *Proc. Inst. Mech. Eng.*, vol. 180, no. 15, 1965/1966, pp. 371–386.

[16] M. Ceccarelli, *Fundamentals of the mechanics of robots.* Dordrecht: Springer Netherlands, 2004, pp. 73–240.

[17] F. R. Spena, "A note on quaternion algebra and finite rotations," *Il Nuovo Cimento B (1971-1996)*, vol. 108, no. 6, pp. 689–698, 1993.

[18] F. Wei, S. Wei, Y. Zhang, and Q. Liao, "Algebraic solution for the forward displacement analysis of the general 6-6 Stewart mechanism," *Chinese Journal of Mechanical Engineering*, vol. 29, no. 1, pp. 56–62, 2016.

[19] K. Wiśniewski, *Parametrization of finite rotations.* Dordrecht: Springer Netherlands, 2010, pp. 126–177.

[20] R. N. Jazar, *Orientation Kinematics.* Boston, MA: Springer US, 2010, pp. 91–147.

[21] J. Selig, *A Little More Kinematics.* New York, NY: Springer New York, 2005, pp. 221–240.

[22] J. Wittenburg, *Rigid Body Kinematics.* Berlin, Heidelberg: Springer Berlin Heidelberg, 2008, pp. 9–36.

[23] J. S. Dai, "Euler–Rodrigues formula variations, quaternion conjugation and intrinsic connections," *Mechanism and Machine Theory*, vol. 92, pp. 144–152, 2015.

[24] M. Erdoğdu and M. Özdemir, "Split quaternion matrix representation of dual split quaternions and their matrices," *Advances in Applied Clifford Algebras*, vol. 25, no. 4, pp. 787–798, 2015.

[25] M. L. Husty and H.-P. Schröcker, *Algebraic Geometry and Kinematics.*New York, NY: Springer New York, 2010, pp. 85–107.